Single Bag Filter Vessels



M8 Series Vessels

Liquid Bag Filter and Basket Strainer

Flows to 220 GPM (832 lpm), 150 PSI (10 Bar)
Port Sizes 1-1/2" to 4" NPT or Flanged

Behringer M8 Series liquid filter vessels effectively and efficiently remove dirt and other contaminants from process liquids. The rugged welded construction is available in carbon steel, 304L, or 316L stainless steel. Adjustable tripod legs are supplied as standard and made of powder-coated steel material (stainless available on request). The lid is secured using three swing bolts with eyenuts, one of which is captive to allow a hinged opening of the lid without complete removal of the eyenuts. There are two housing sizes available, which accept industry standard size #1 and size #2 bags. Multiple size connections are available as well as outlet locations and types. Operating pressures can be accomodated up to 150 PSI at 300 degrees F.

Specifications

Materials of Construction

Filter Vessel Material:

C	Carbon steel (painted)
T	304L stainless steel (bead blast satin finish)
X	316L stainless steel (bead blast satin finish)

Basket Material:
304 stainless steel with 9/64" perforations
other perforations or materials on request

Adjustable Tripod Legs:
painted carbon steel, stainless on request

Seals:
NBR (standard), Viton, EPDM, Teflon enc. Viton

Porting Arrangements

Connections:
NPT(F) thread or ANSI/ASME B16.5 class 150 flange

A or B outlet style:	1-1/2", 2", 2-1/2", 3", 4"
AB dual outlet style:	2" NPT standard is dual outlet

Additional Ports:

Gauge ports (2x):	1/4" NPT(F), plugged
Drain port:	3/4" NPT(F), plugged
Lid vent port:	1/4" NPT(F), plugged

Recommended Operating Conditions

Type:
Inline single strainer or bag filter vessel

Flow Rate:
110 GPM max vessel flow (Size 1)
220 GPM max vessel flow (Size 2)

Max Temperature:
300 °F (149 °C) dependent on seal and bag materials

Max Working Pressure:
150 PSI (10 bar)

Recommended Change-out:
15 psid (1 bar)

Port Configurations

2" NPT vessels have both side and bottom outlet. Move plug to change outlet port location. 2" NPT with dual outlets is the most commonly available version.

Other size NPT and all flange vessels have choice of bottom or side outlet. Same-side inlet and outlet is also available on request. See "How to Order" for details.

Filter Sizing and Selection

Vessel Sizing:

Sizing bag filters and basket strainers is typically done so that initial (clean) pressure drop of the filter vessel and any installed media does not exceed 2 psid. To aid in selection, please refer to the instructions and charts contained on this page.

Vessel pressure drop is shown in the chart to the right, applies to any vessel regardless of size, and is inclusive of perforated basket. Vessel delta-P is strictly determined by connection size.

Follow the steps below to calculate complete pressure drop of the filter assembly.

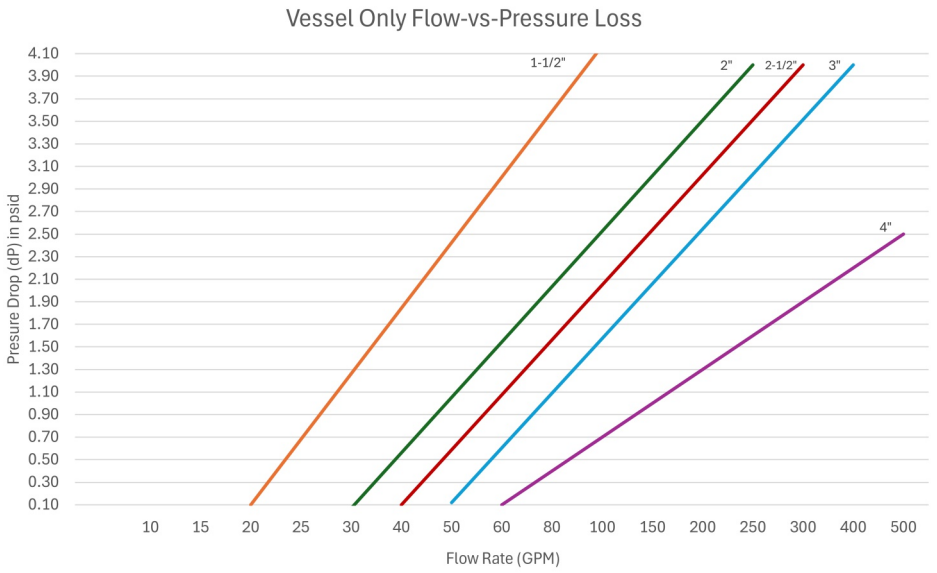

1. Use the chart above to find the flow rate of the application across the x-axis and then follow directly vertical from the flow rate to the intersection of the line of the desired connection size. This is the pressure drop in psi for the vessel.
2. Multiply the pressure drop determined from the chart in step 1 by the viscosity correction factor found in the chart below. For all perforated baskets, the factor remains constant. For mesh-lined baskets, use the appropriate row.
3. The pressure drop of any filter bag, cartridge, or other medium being installed in the vessel must be added to the value calculated in step 2. This is the complete assembly initial pressure drop.

Basket Style	Fluid Viscosity in Centipoise (cP)								
	1	50	100	200	400	600	800	1000	2000
Perforated	0.65	0.85	1.00	1.10	1.20	1.40	1.50	1.60	1.80
40 Mesh Lined	0.73	0.95	1.20	1.40	1.50	1.80	1.90	2.00	2.30
60 Mesh Lined	0.77	1.00	1.30	1.60	1.70	2.10	2.20	2.30	2.80
80 Mesh Lined	0.93	1.20	1.50	1.90	2.10	2.40	2.60	2.80	3.50
100 Mesh Lined	1.00	1.30	1.60	2.20	2.40	2.70	3.00	3.30	4.40
200 Mesh Lined	1.30	1.70	2.10	3.00	3.40	3.80	4.40	5.00	6.80

Sizing Notes:

Total calculated initial (clean) pressure drop target for complete filter assembly should be 2 psid as stated above. This target is selected to give optimal filter bag or cartridge service life and dirt-holding capacity. In some applications where contamination loading rates are low, it may be acceptable to size to 3+ psid. For applications where clean pressure drop will exceed 3 psid, please consult factory. Typical change-out should occur at 15 psid for most applications. Actual change out will vary by installed filter medium. Consult technical datasheet of installed filter medium for recommended change-out pressure.

Sizing Example:

For an application flow rate of 80 gallons per minute through a housing with 2" connections, the initial pressure drop can be determined from the chart as 2.1 psid. Next calculate the viscosity correction factor for a fluid with a viscosity of 50 cP through a perforated basket by multiplying the correction factor of 0.85 x 2.1 psid = 1.785 total vessel psid. Next, calculate the initial pressure drop of the installed filter bag or cartridge from it's technical datasheet and add this value to the vessel pressure drop. This value is the total filter assembly pressure drop. Filter bags and cartridges sold separately.

Dimensions

Size #1 Threaded Housing Style A (Bottom Outlet):

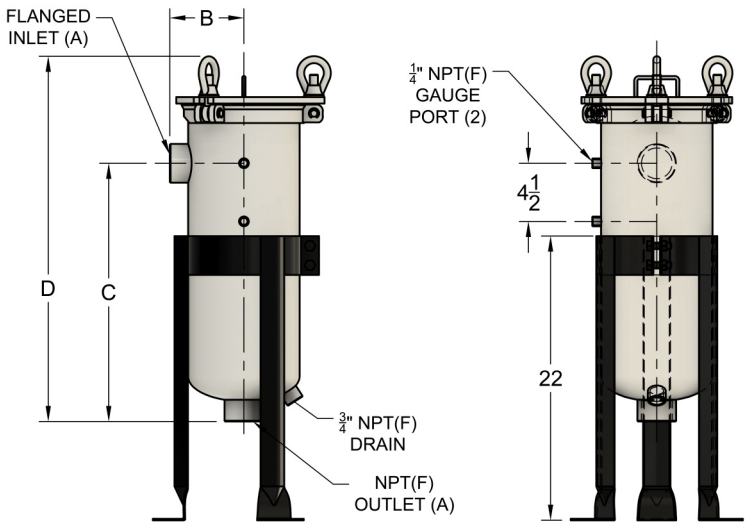

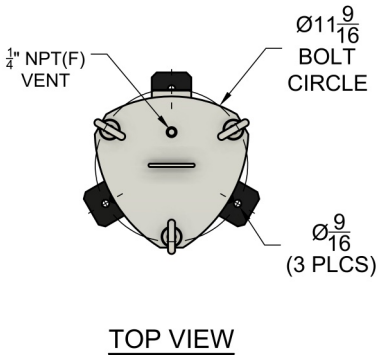

Vessel Size	Connection Size (A)	B	C	D
Size #1 (15")	1-1/2" NPT(F)	5 5/8"	19 7/8"	28 1/8"
	2" NPT(F)	5 3/4"	20"	28 1/4"
	2-1/2" NPT(F)	5 3/4"	20 1/8"	28 3/8"
	3" NPT(F)	5 7/8"	20 1/4"	28 1/2"

Size #1 Threaded Housing Style B (Side Outlet):

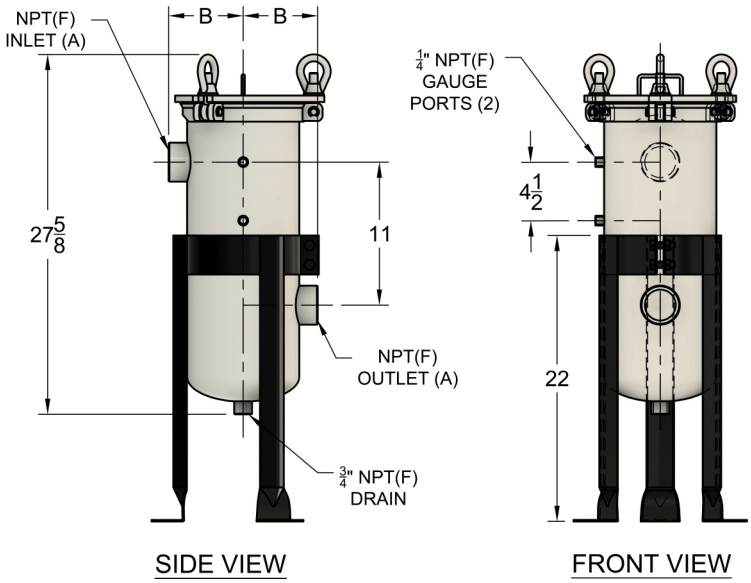

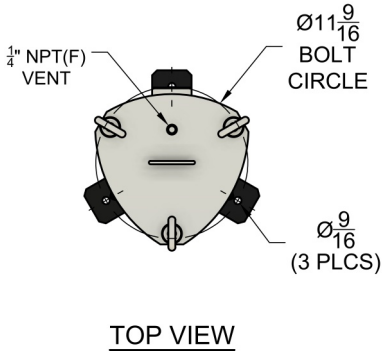

Vessel Size	Connection Size (A)	B
Size #1 (15")	1-1/2" NPT(F)	5 5/8"
	2" NPT(F)	5 3/4"
	2-1/2" NPT(F)	5 3/4"
	3" NPT(F)	5 7/8"

Dimensions

Size #2 Threaded Housing Style A (Bottom Outlet):

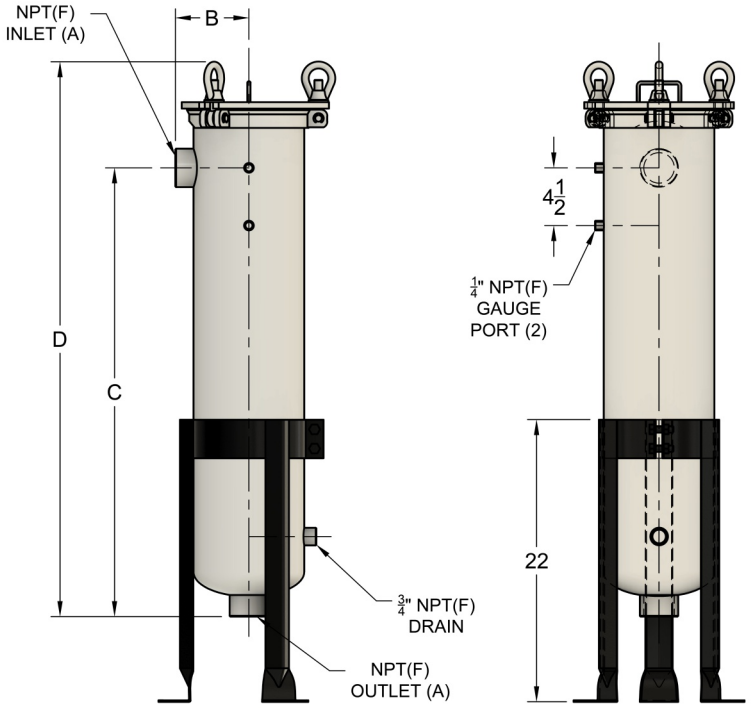

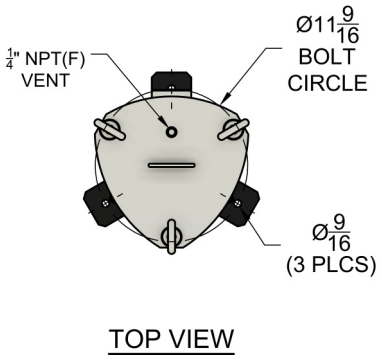

Vessel Size	Connection Size (A)	B	C	D
Size #2 (30")	1-1/2" NPT(F)	5 5/8"	34 7/8"	43 1/8"
	2" NPT(F)	5 3/4"	35"	43 1/4"
	2-1/2" NPT(F)	5 3/4"	35 1/8"	43 3/8"
	3" NPT(F)	5 7/8"	35 1/4"	43 1/2"

Size #2 Threaded Housing Style B (Side Outlet):

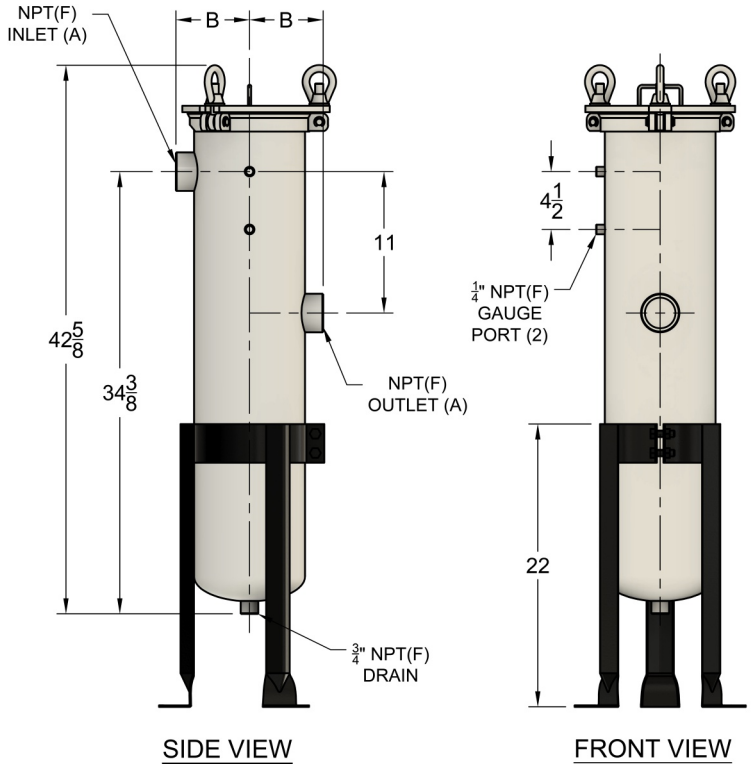

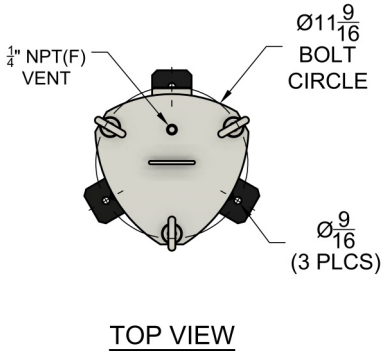

Vessel Size	Connection Size (A)	B
Size #2 (30")	1-1/2" NPT(F)	5 5/8"
	2" NPT(F)	5 3/4"
	2-1/2" NPT(F)	5 3/4"
	3" NPT(F)	5 7/8"

Dimensions

Size #1 Flanged Housing Style A (Bottom Outlet):

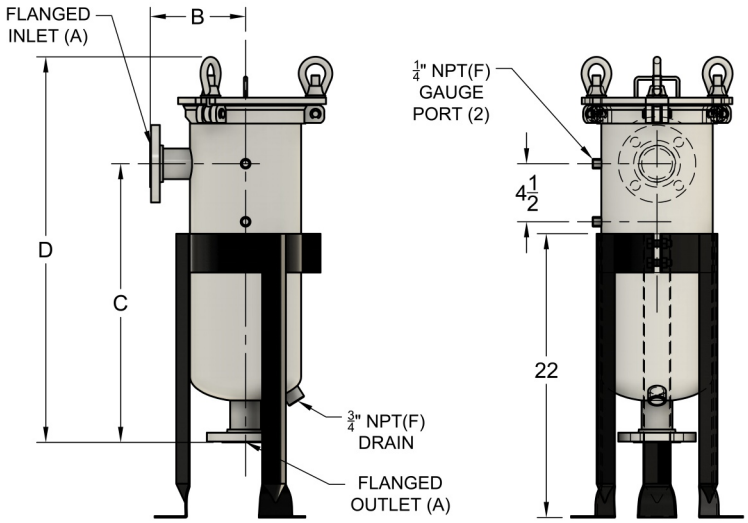

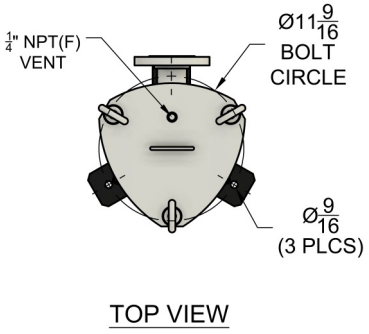

Vessel Size	Connection Size (A)	B	C	D
Size #1 (15")	1-1/2" FLANGE	7 7/16"	21 5/8"	29 7/8"
	2" FLANGE	7 7/16"	21 5/8"	29 7/8"
	2-1/2" FLANGE	7 5/16"	21 5/8"	29 7/8"
	3" FLANGE	7 3/16"	21 1/2"	29 3/4"
	4" FLANGE	8 3/16"	23 1/8"	30 7/8"

Size #1 Flanged Housing Style B (Side Outlet):

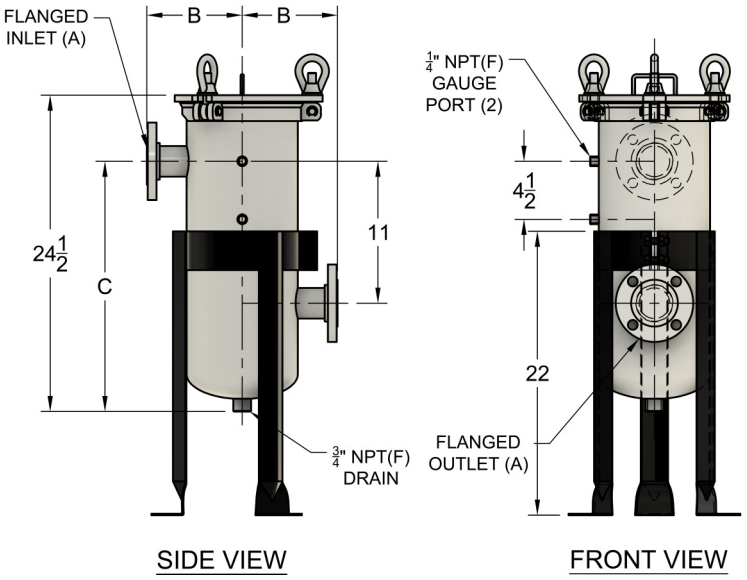

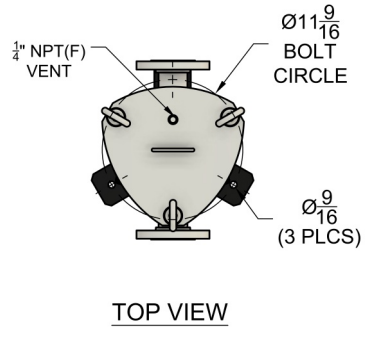

Vessel Size	Connection Size (A)	B	C
Size #1 (15")	1-1/2" FLANGE	7 7/16"	19 3/8"
	2" FLANGE	7 7/16"	
	2-1/2" FLANGE	7 5/16"	
	3" FLANGE	7 3/16"	
	4" FLANGE	8 3/16"	19 7/8"

Dimensions

Size #2 Flanged Housing Style A (Bottom Outlet):

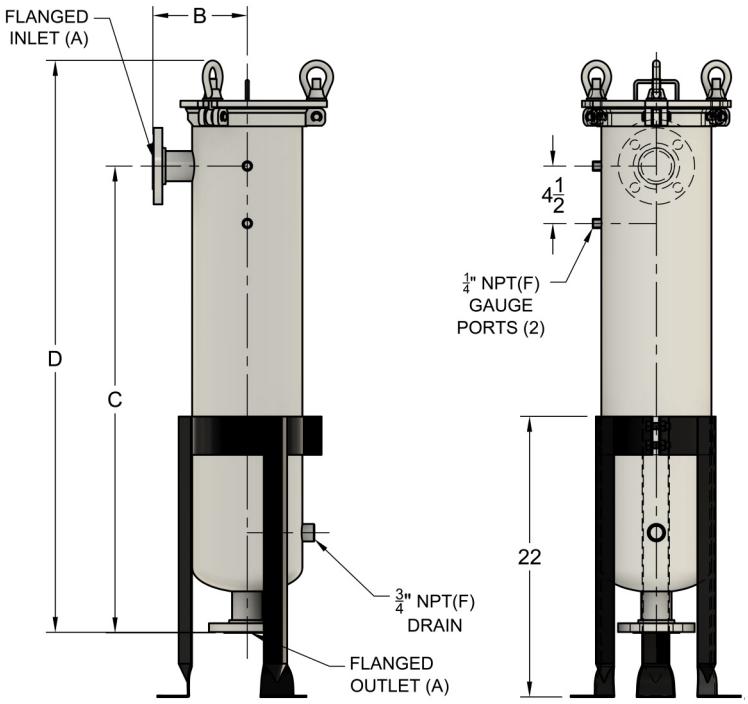

SIDE VIEW FRONT VIEW

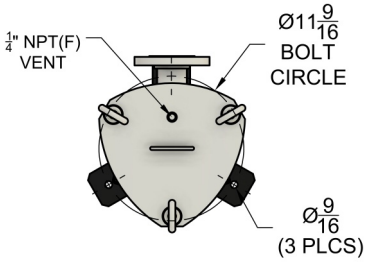

TOP VIEW

Vessel Size	Connection Size (A)	B	C	D
Size #2 (30")	1-1/2" FLANGE	7 7/16"	36 5/8"	41 3/4"
	2" FLANGE	7 7/16"	36 5/8"	41 3/4"
	2-1/2" FLANGE	7 5/16"	36 9/16"	41 11/16"
	3" FLANGE	7 3/16"	36 1/2"	41 5/8"
	4" FLANGE	8 3/16"	36 5/16"	41 1/2"

Size #2 Flanged Housing Style B (Side Outlet):

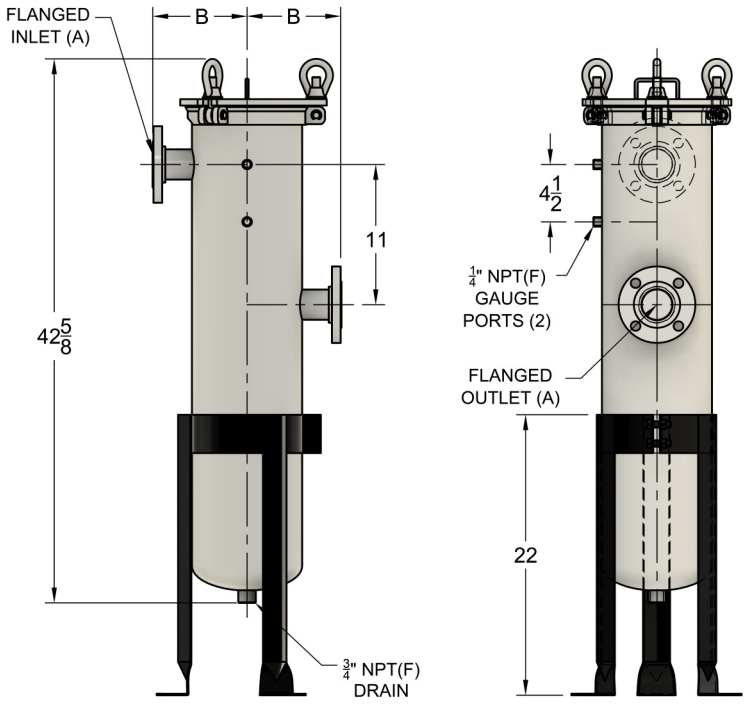

SIDE VIEW FRONT VIEW

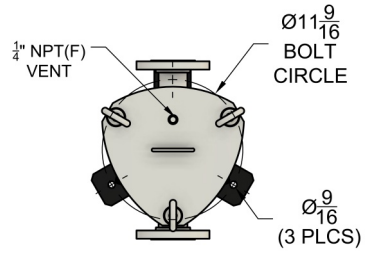

TOP VIEW

Vessel Size	Connection Size (A)	B
Size #2 (30")	1-1/2" FLANGE	7 7/16"
	2" FLANGE	7 7/16"
	2-1/2" FLANGE	7 5/16"
	3" FLANGE	7 3/16"
	4" FLANGE	8 3/16"

How to Order

Vessel Ordering Code:

M8 Table 1 Table 2 Table 3 Table 4 Table 5 Table 6 Table 7 Table 8

M8 ___ ___ ___ ___ ___ ___ - ___ ___

Material	Table 1
C	Carbon Steel
T	304L Stainless
X	316L Stainless

Size	Table 2
1	Size #1 (15")
2	Size #2 (30")

Ports	Table 3
T	NPT (F)
F	Flange

Connections	Table 4
8	1 1/2"
9	2"
10	2-1/2"
11	3"
12	4"

Outlet	Table 5
A	Bottom
B	Side
AB	Bottom & Side (2" NPT as Standard) other sizes as special

Seals	Table 6
N	Nitrile (Buna)
E	EPR
V	Viton
T	Teflon Encap-sulated Viton

Accessories	Table 7
GX2	Dual Gauges
DS	dP Switch
DG	dP Gauge
DGS	dP Gauge with Switch
AK	Accessory Kit

Specials	Table 8
Special Options (see below)	

Special Options and Design Considerations:

Pressure Rating:
150 PSI is standard. Call for other options.

Lugs:
3-lug hinged lid is standard. Call for other options.

Outlets:
Options include same side outlet, inline, elbow.

Connections:
Options include sanitary tri-clamp, Victaulic, BSPT, BSPP, DIN flange, pipe stub, socket weld, or combination.

Legs:
Painted carbon steel is standard. Stainless, no legs, others on request

Gauge Ports:
2 standard, additional diagnostic ports can be added.

Finish:
Black painted finish standard for carbon steel vessels, bead blast finish standard on stainless vessels. Optional finishes can include: electro-polished, epoxy coated, special paint, customer-specific.

Accessory Kit:
Contains vent valve assembly, dual liquid filled gauges, applicable drain assembly

*Filter bags and cartridges sold separately. Contact Behringer for assistance selecting the proper solution for your application.

Typical / Common Configurations:

M8T2T9ABN	304L Stainless Vessel, Size 2, 2" NPT Connections, Dual Outlets (Side and Bottom), Buna Seals
M8C2T9ABN	Carbon Steel Vessel, Size 2, 2" NPT Connections, Dual Outlets (Side and Bottom), Buna Seals
M8T2F9AN	304L Stainless Vessel, Size 2, 2" Flange Connections, Bottom Outlet, Buna Seals
M8X2F9AN	316L Stainless Vessel, Size 2, 2" Flange Connections, Bottom Outlet, Buna Seals